NOVASTACK® 35-HDH

嵌合高さ 1.5 mm、0.35 mm ピッチ、フルシールド、
高速伝送対応20GHz（≒40 Gbps）/lane

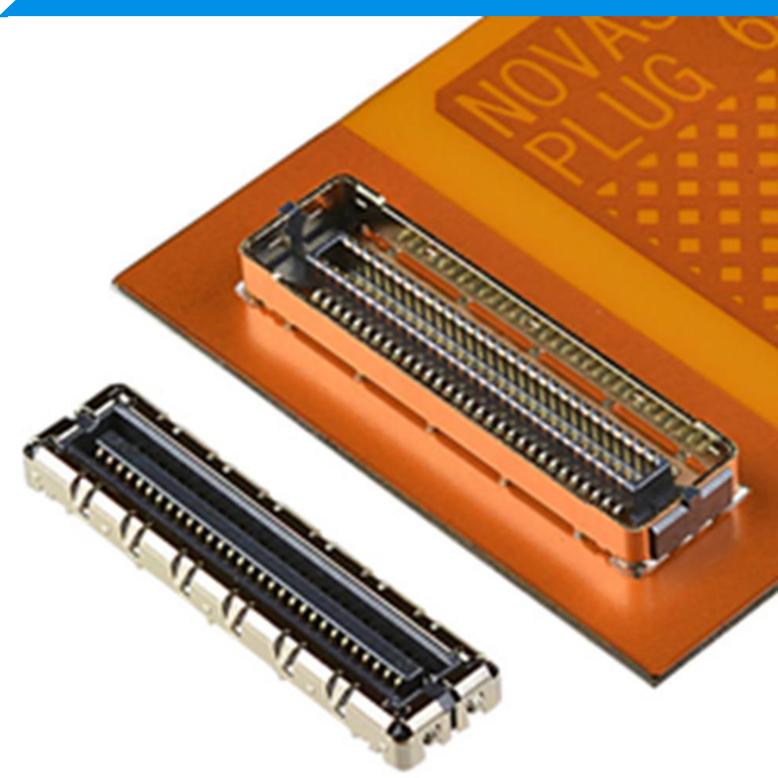

Product Specifications:

Board Pitch (mm)		0.35
Wiping Length (mm)		0.33
Mated Size (mm)	Height	1.5 +/- 0.10
	Width	3.3+(0.35*?p/2)
	Depth	3.64
Current Rating	Signal	0.5A/pin (12.0A Max. (Total))
	Power	-
Pin Counts	Range	10 - 70
	Available	60

*記載のない極数の対応状況についてはお問い合わせください。

Applicable Standards (Reference Only):

USB4 (20 Gbps/lane); USB 3.1 Gen 2 (10 Gbps); eDP HBR 3 (8.1 Gbps); eDP HBR 2 (5.4 Gbps); HDMI 2.0 (6 Gbps); V-By-One HS 1.4 (4 Gbps); MiPi standards

▶ 20 GHz(≒40 Gbps)/laneの伝送が可能で最新の高速信号に最適

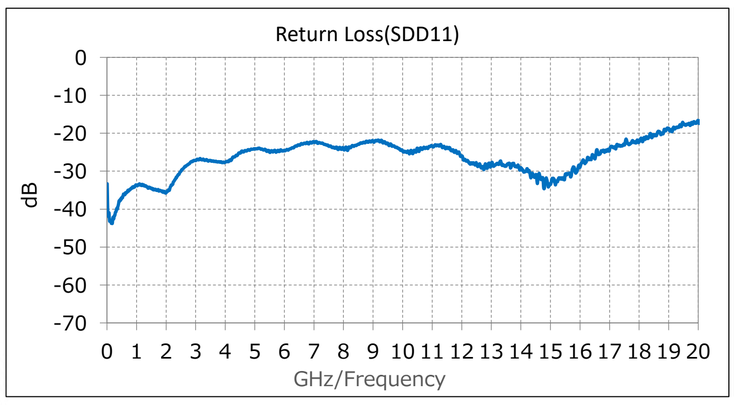

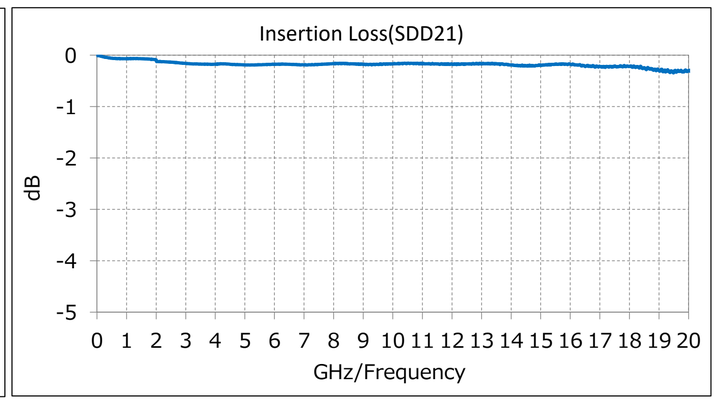

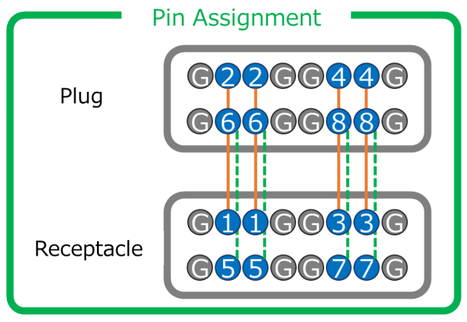

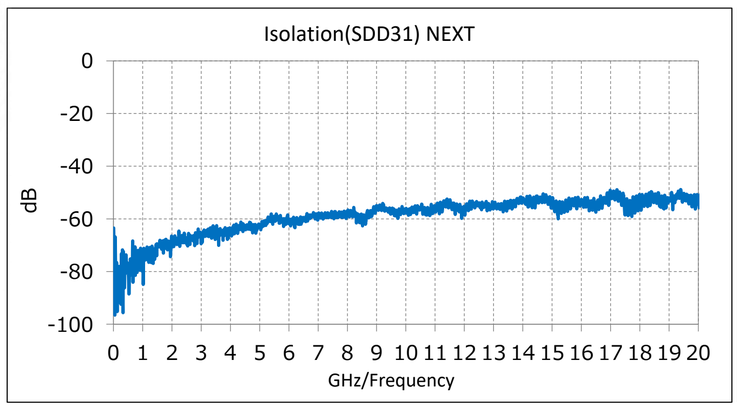

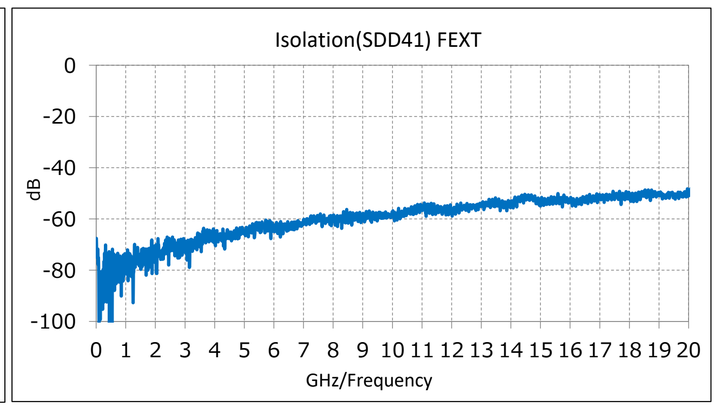

▶ 多点グランド接点によるZenShield® フルシールドでEMC対策

PLUG

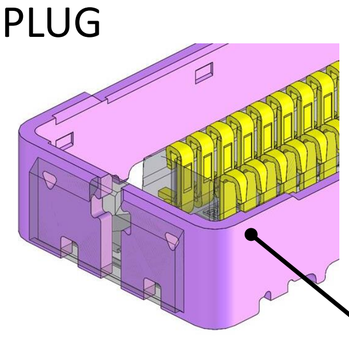

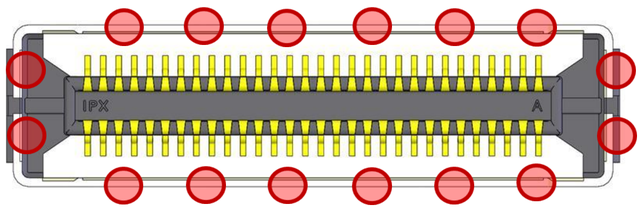

Metal shell

RECEPTACLE

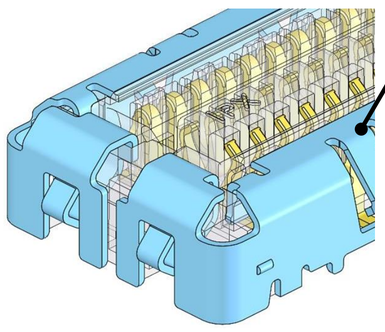

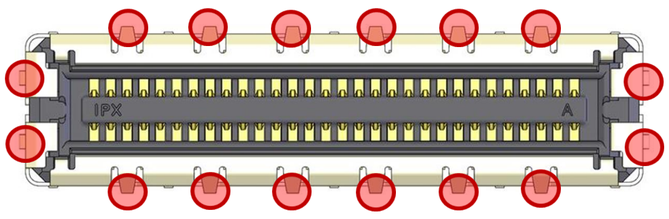

: Ground 接点箇所

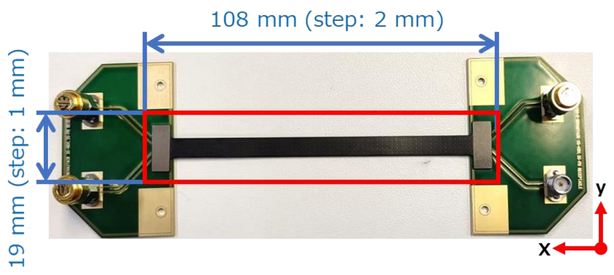

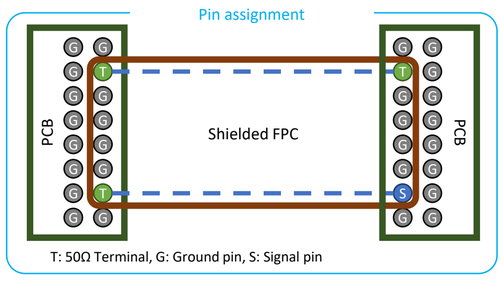

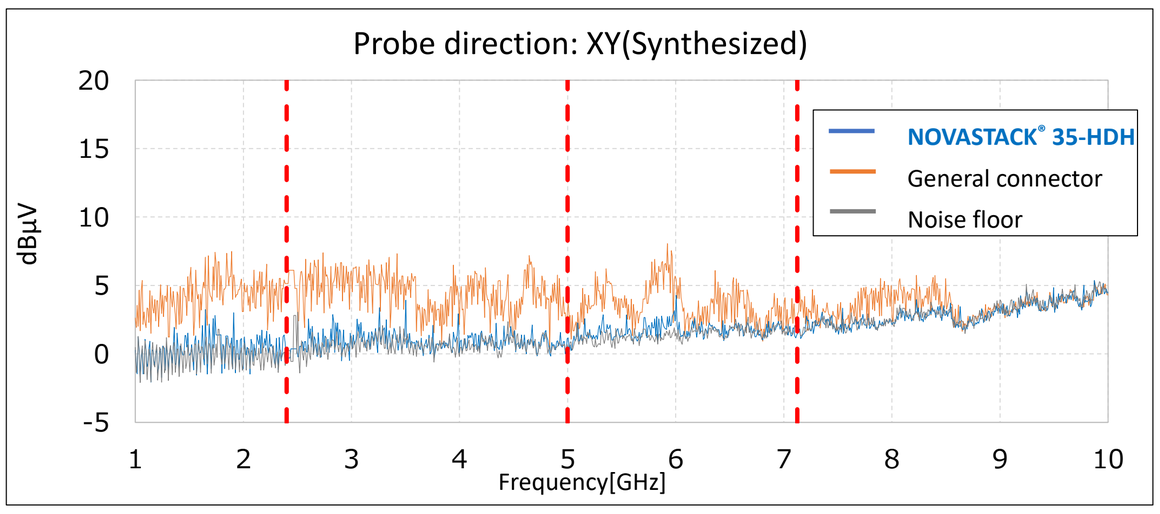

EMI measurement result

▶ 嵌合作業性に優れた設計の高背コネクタ

コンタクトピッチ以上のガイド量で適正な嵌合位置へ誘導

PLUG

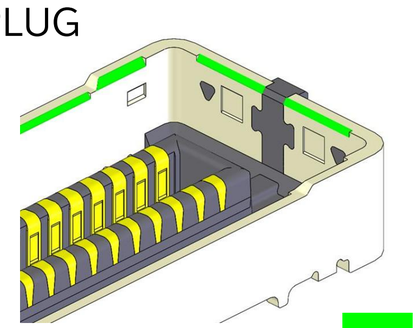

RECEPTACLE

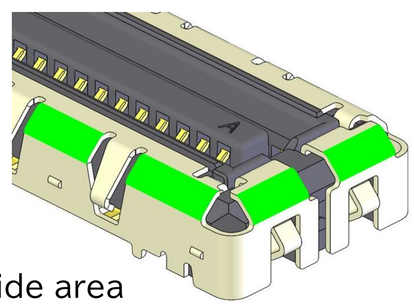

Mating guide area

Unit: mm

Direction	Guide amount
X	0.375
Y	0.390

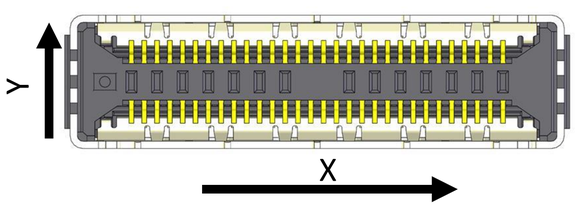

大きな有効嵌合長により嵌合傾きに強い

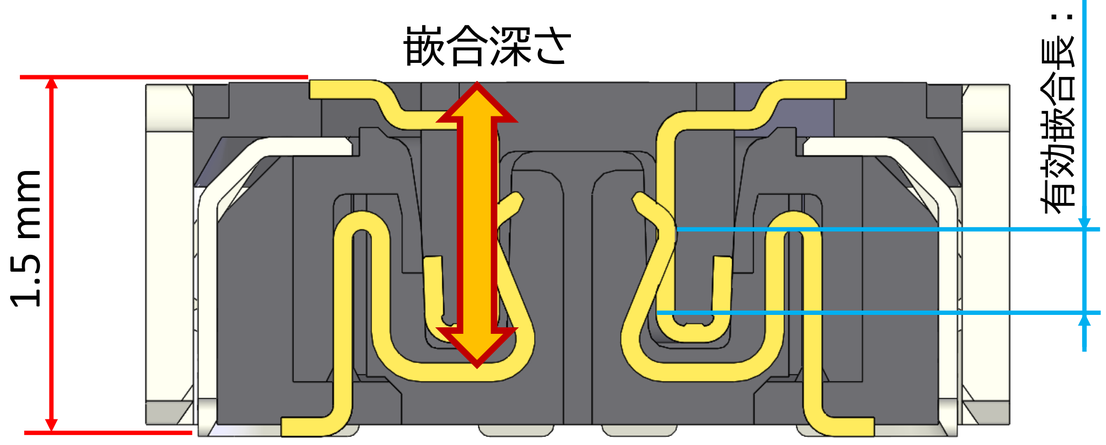

Component Parts Detail

Plug Assembly

Recommended P/N	21003-060E				
PART No.	Pos.	A	B	C	D
21003-060E	60	13.80	9.80	11.95	10.15

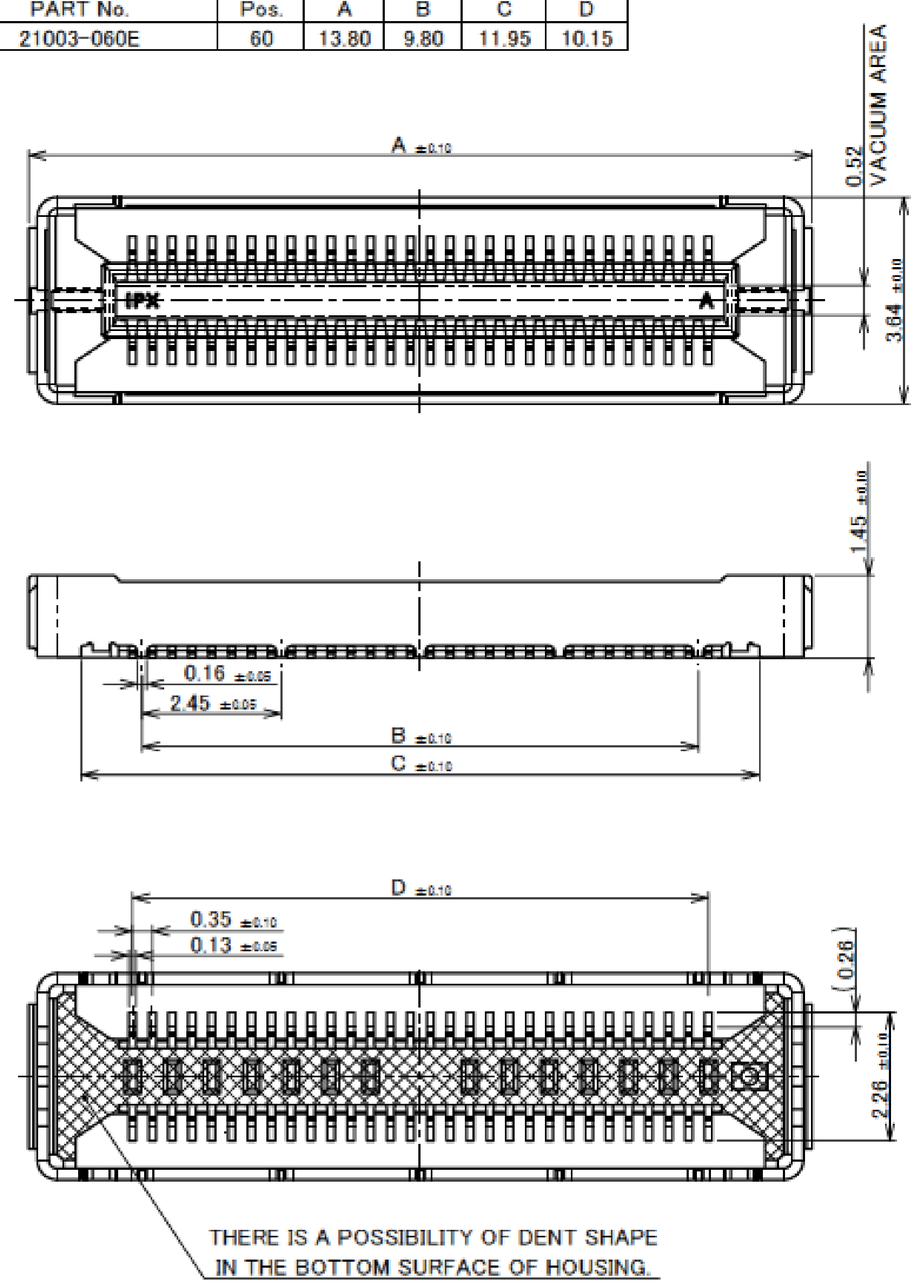

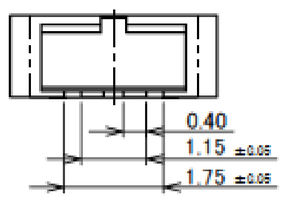

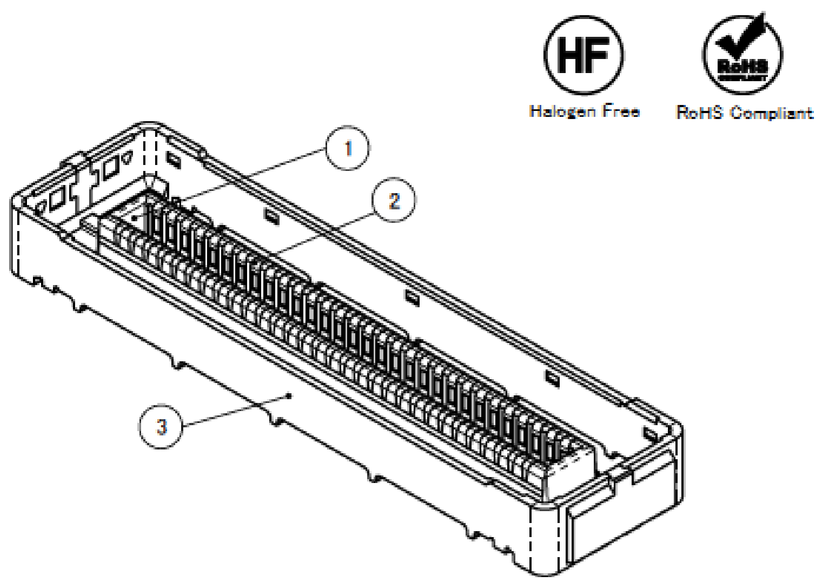

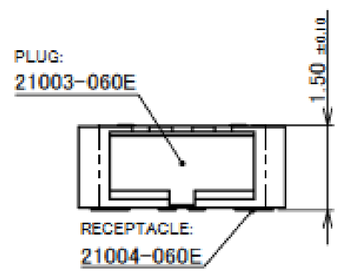

MATING CONDITON

NO.	DESCRIPTION	MATERIAL	FINISH, REMAKS
3	SHELL	CORSON ALLOY	ALL Au 0.01 μm MIN. OVER Ni 1.27 μm MIN.
2	CONTACT	CORSON ALLOY	CONTACT AREA : Au 0.13 μm MIN. OVER Ni 1.27 μm MIN. SOLDERING AREA : Au 0.02 μm MIN. OVER Ni 1.27 μm MIN.
1	HOUSING	LCP	UL94V-0 , BLACK

Rev.1

Plug Assembly

PART No.	Pos.	B	D	E
21003-060E	60	9.80	10.15	13.70

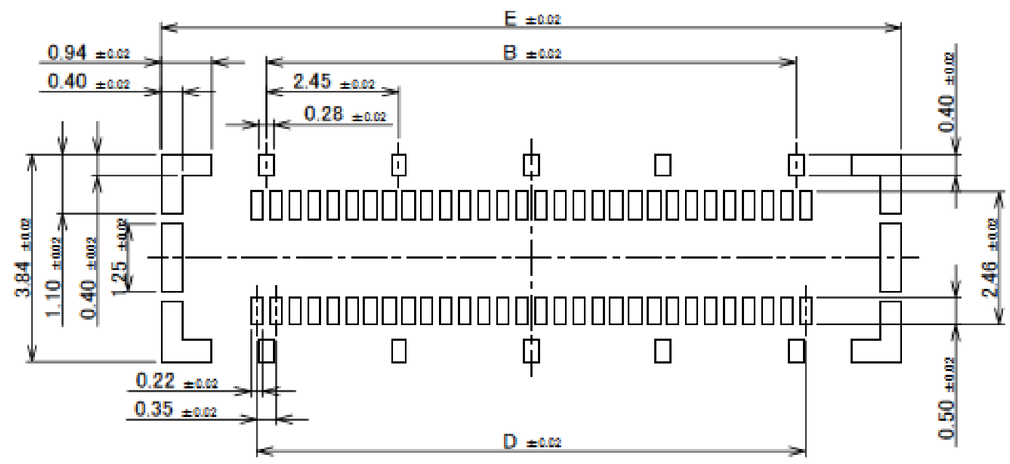

RECOMMENDED PATTERN LAYOUT

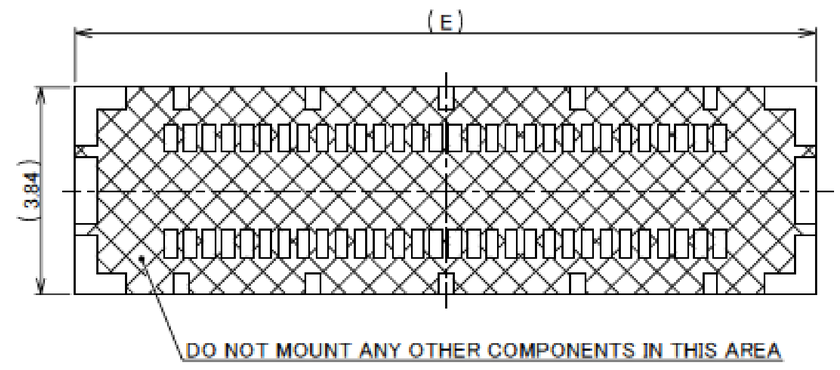

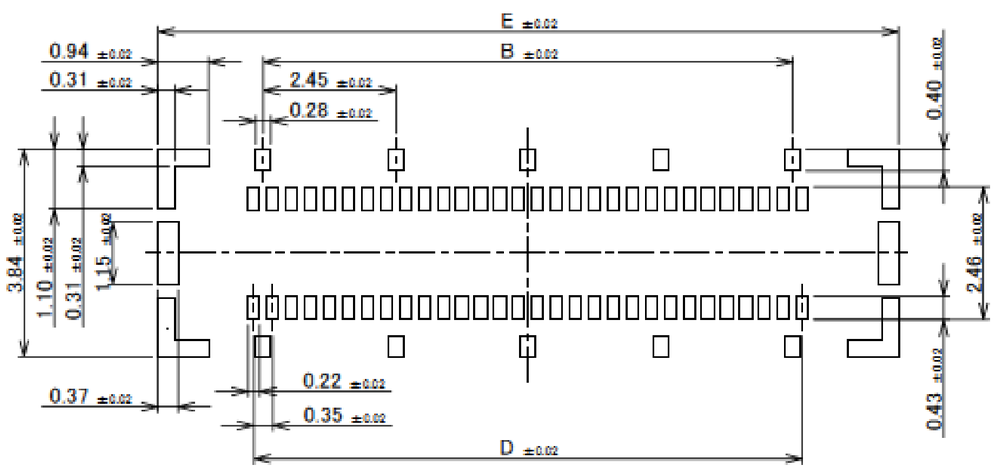

RECOMMENDED METAL MASK LAYOUT(t=0.10)

Rev.1

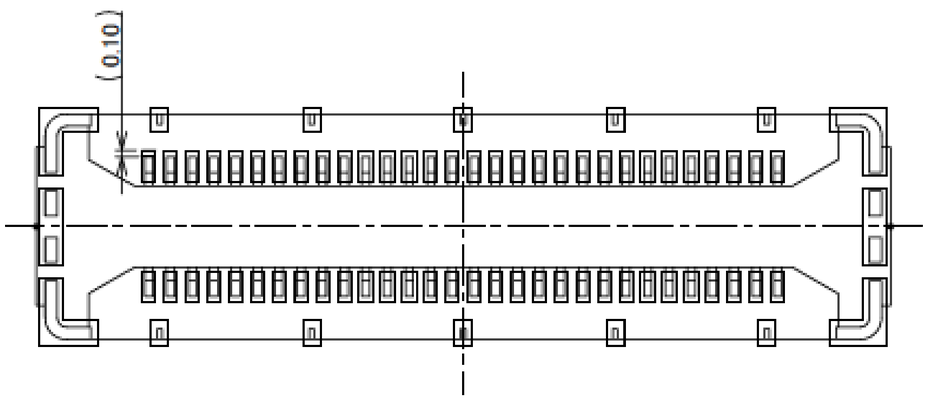

CONNECTOR ON RECOMMNDED FOOT PRINT PATTERN LAYOUT

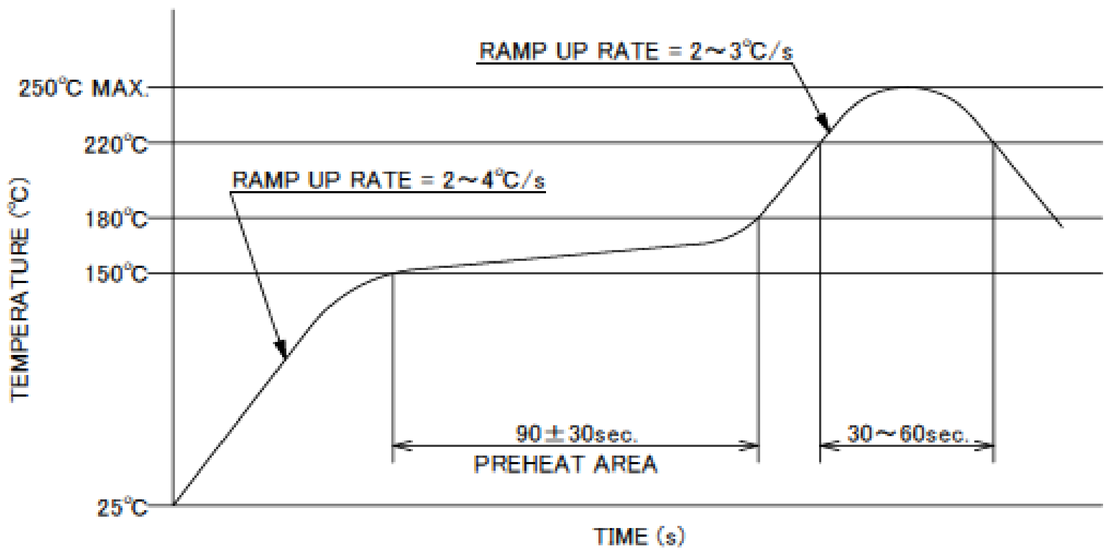

REFLOW TEMPERATURE PROFILE
SENJU METAL INDUSTRY CO., LTD. : M705-SHF(Sn96.5 Ag3.0 Cu0.5)

Rev.1

Plug Assembly

ITEMS	SPECIFICATION
APPLICABLE CONNECTOR PART No.	21004-060E
RATING VOLTAGE	60V AC (R.M.S.)/DC (PER CONTACT PIN)
RATING AMPERAGE (FOR SIGNAL CONTACT)	0.5A AC/DC (PER CONTACT PIN)/ 12.0A AC/DC(TOTAL)
OPERATING TEMPERATURE	233～358K(-40℃～+85℃) (CONTANING TEMPERATURE RISE BY CURRENT)
OPERATING HUMIDITY	85% MAX.(NON-CONDENSING)
CONTACT RESISTANCE (FOR SIGNAL CONTACT)	INITIAL : 50mohm MAX. / AFTER TEST : ⊿50mohm MAX.
CONTACT RESISTANCE (FOR GROUND)	INITIAL : 20mohm MAX. / AFTER TEST : ⊿20mohm MAX.
INSULATION RESISTANCE	INITIAL : 1000Mohm MIN. / AFTER TEST : 500Mohm MIN.
DIELECTRIC WITHSTANDING VOLTAGE	AC250V 1min
DURABILITY	20 CYCLES
MATING FORCE (INITIAL / AFTER TEST)	INITIAL 60N MAX.
UNMATING FORCE (INITIAL / AFTER TEST)	20 CYCLES 6.0N MIN.
COPLANARITY	0.10mm MAX.
PRODUCT SPECIFICATION	PRS-2785
TEST REPORT	TR-22021
PACKING STANDARD	PST-21086
INSTRUCTION MANUAL	HIM-21015
APPEARANCE CRITERIA No.	QLS-A***

Rev.1

Receptacle Assembly

Recommended P/N	21004-060E			
PART No.	Pos.	A	B	C
21004-060E	60	13.05	9.80	10.15

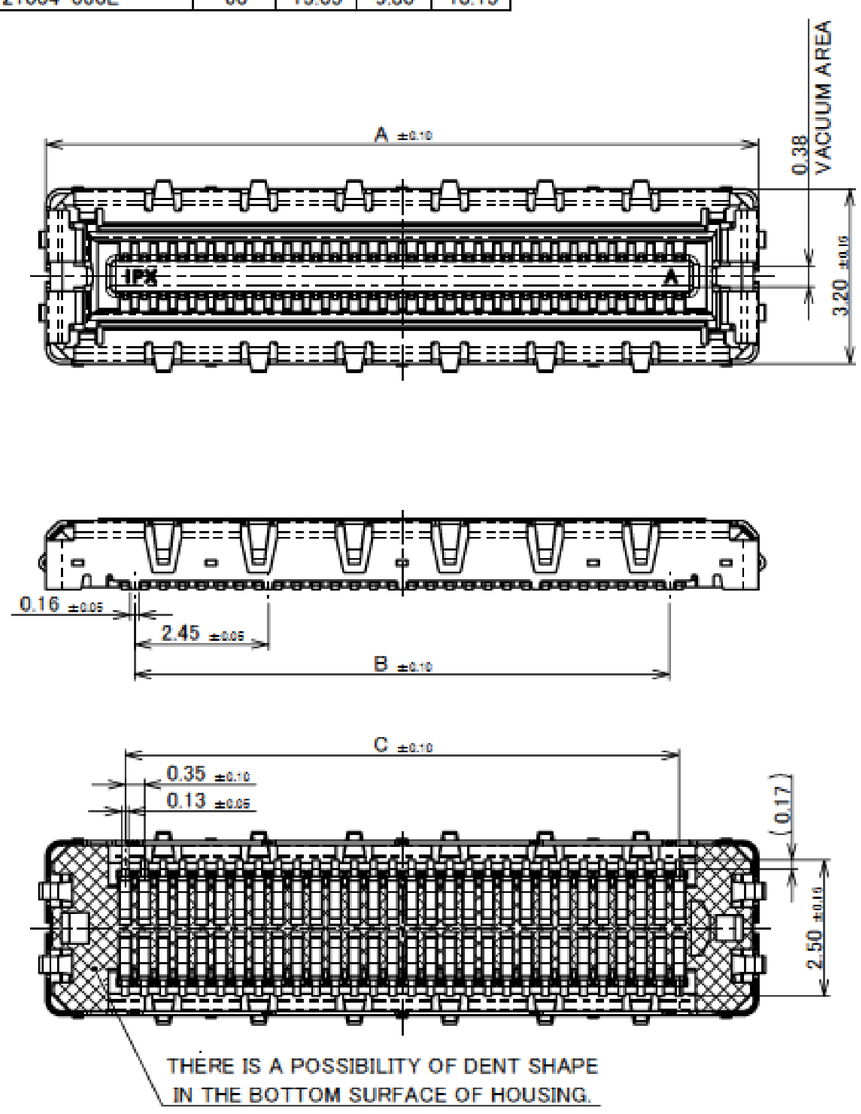

Halogen Free RoHS Compliant

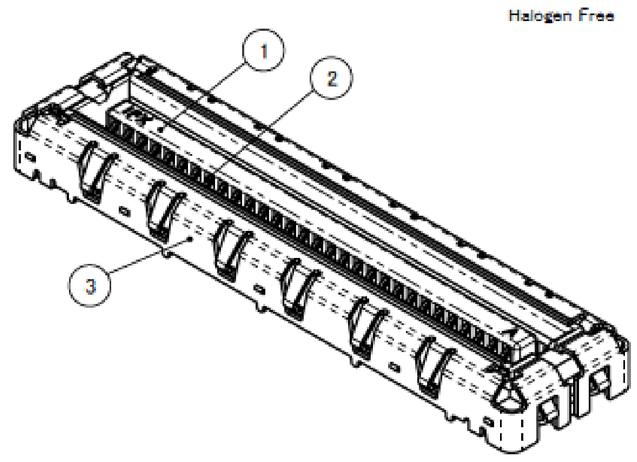

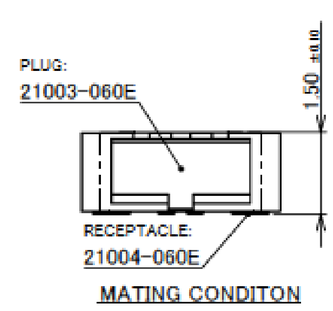

NO.	DESCRIPTION	MATERIAL	FINISH, REMAKS
3	SHELL	CORSON ALLOY	ALL Au 0.01 μm MIN. OVER Ni 1.27 μm MIN.
2	CONTACT	CORSON ALLOY	CONTACT AREA: Au 0.13 μm MIN. OVER Ni 1.27 μm MIN. SOLDERING AREA: Au 0.02 μm MIN. OVER Ni 1.27 μm MIN.
1	HOUSING	LCP	UL94V-0 , BLACK

Rev.1

Receptacle Assembly

PART No.	Pos.	B	C	D
21004-060E	60	9.80	10.15	13.25

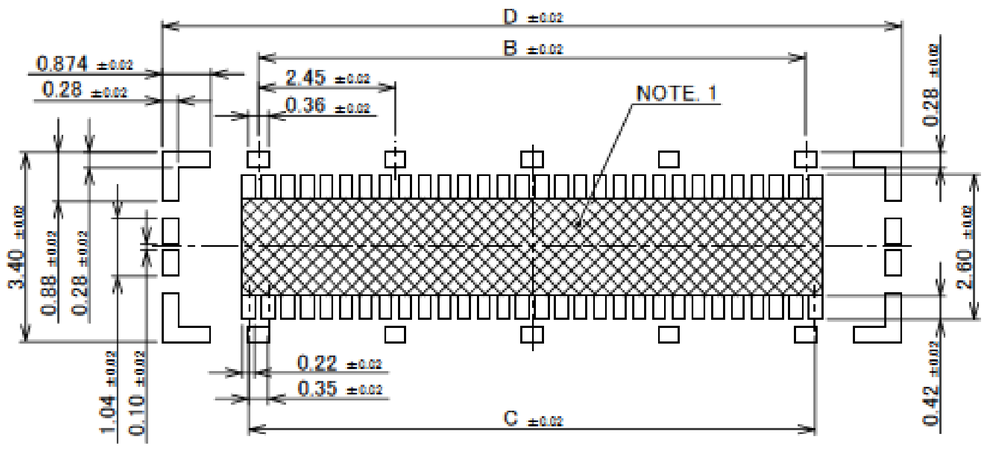

RECOMMENDED PATTERN LAYOUT

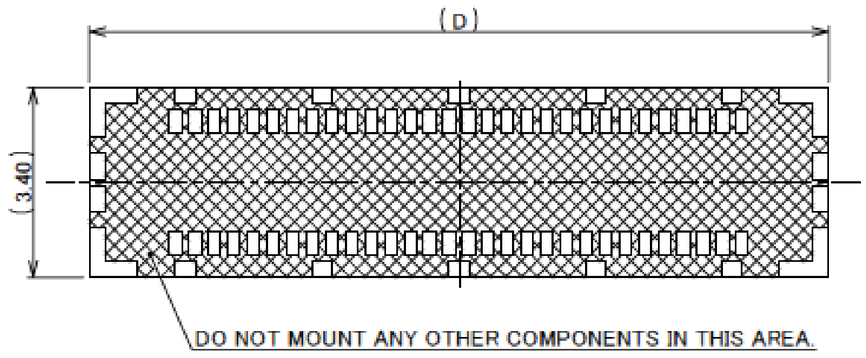

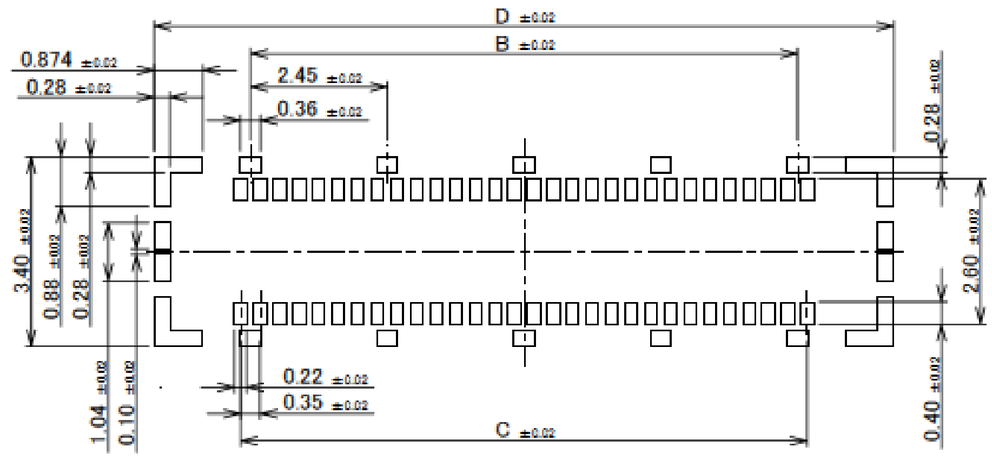

RECOMMENDED METAL MASK LAUOUT (t=0.10)

NOTES.
1. FOOT PRINT PATTERN PROHIBITION AREA
SOLDER RESIST MUST BE APPLIED TO THIS HATCHED AREA IF SURFACE TRACES ARE ROUNTED.

Rev.1

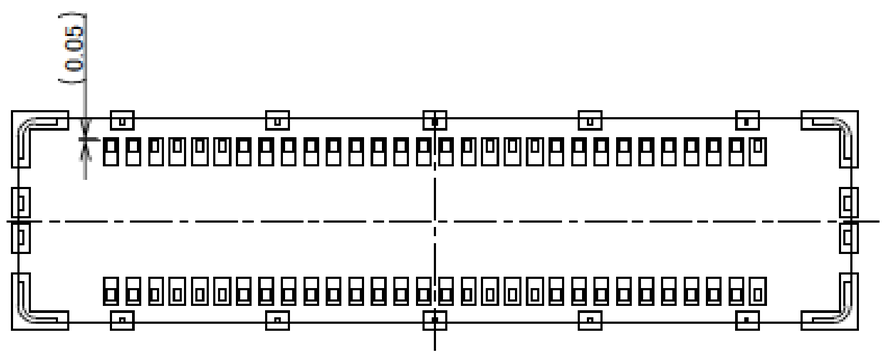

CONNECTOR ON RECOMMENDED FOOTPRINT PATTERN LAYOUT

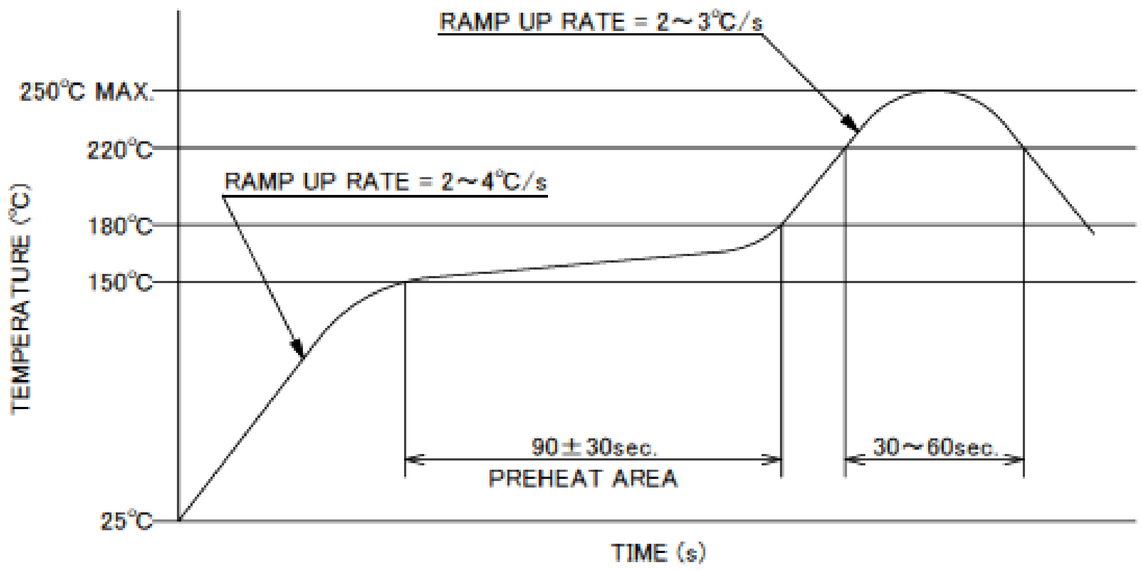

REFLOW TEMPERATURE PROFILE
SENJU METAL INDUSTRY CO., LTD. : M705-SHF(Sn96.5 Ag3.0 Cu0.5)

Rev.1

Receptacle Assembly

ITEMS	SPECIFICATION
APPLICABLE CONNECTOR PART No.	21003-060E
RATING VOLTAGE	60V AC (R.M.S.)/DC (PER CONTACT PIN)
RATING AMPERAGE (FOR SIGNAL CONTACT)	0.5A AC/DC (PER CONTACT PIN)/ 12.0A AC/DC(TOTAL)
OPERATING TEMPERATURE	233～358K(-40℃～+85℃) (CONTANING TEMPERATURE RISE BY CURRENT)
OPERATING HUMIDITY	85% MAX.(NON-CONDENSING)
CONTACT RESISTANCE (FOR SIGNAL CONTACT)	INITIAL : 50mohm MAX. / AFTER TEST : ⊿50mohm MAX.
CONTACT RESISTANCE (FOR GROUND)	INITIAL : 20mohm MAX. / AFTER TEST : ⊿20mohm MAX.
INSULATION RESISTANCE	INITIAL : 1000Mohm MIN. / AFTER TEST : 500Mohm MIN.
DIELECTRIC WITHSTANDING VOLTAGE	AC250V 1min
DURABILITY	20 CYCLES
MATING FORCE (INITIAL / AFTER TEST)	INITIAL 60N MAX.
UNMATING FORCE (INITIAL / AFTER TEST)	20 CYCLES 6.0N MIN.
COPLANARITY	0.10mm MAX.
PRODUCT SPECIFICATION	PRS-2785
TEST REPORT	TR-22021
PACKING STANDARD	PST-21087
INSTRUCTION MANUAL	HIM-21015
APPEARANCE CRITERIA No.	QLS-A***

Rev.1

Custom Connectors Available

RF Connector

MHF® series

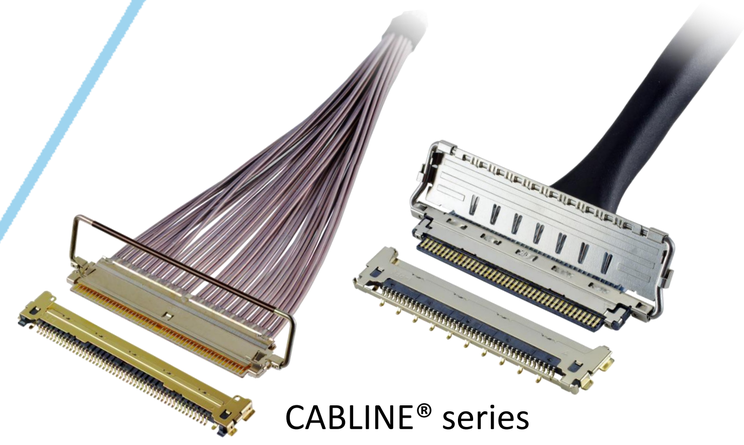

CABLINE® series

Micro-coaxial/Twinax/ Discrete Wire Connector

Optical Module

LIGHTPASS® series

NOVASTACK® series

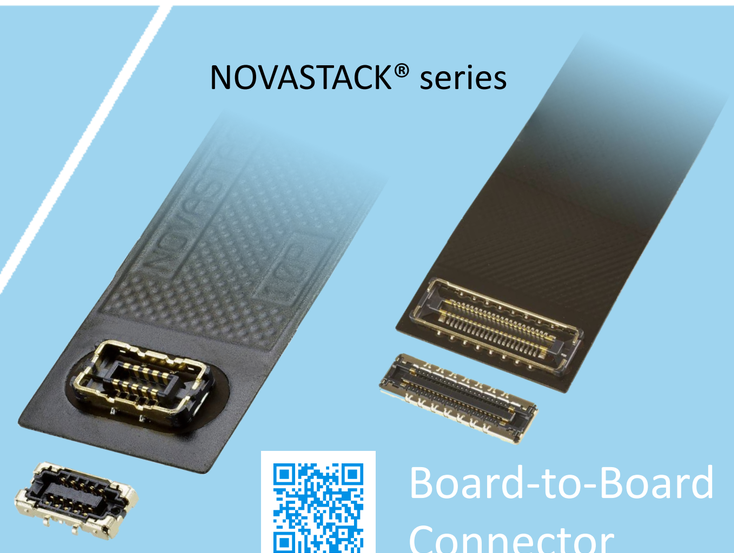

Board-to-Board Connector

Power Connector/ Terminal

AP series

ISH® series

MINIFLEX® series

EVAFLEX® series

FPC FFC Connector

Inquiry

MINIDOCK® series

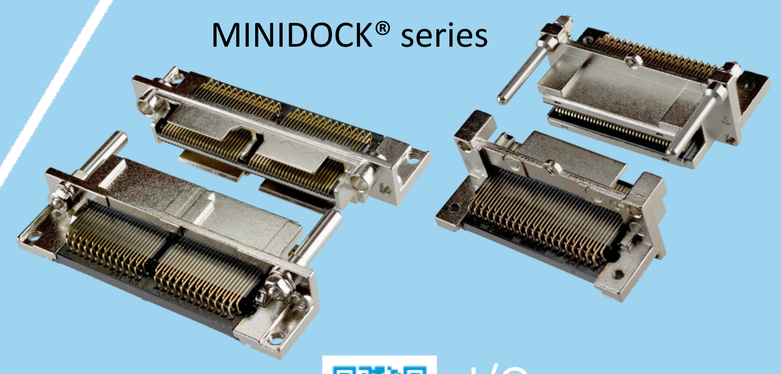

I/O Connector

I-PEX, MHF, CABLINE, LIGHTPASS, NOVASTACK, ISH, IARPB, MINIFLEX, EVAFLEX, MINIDOCKS and ZenShield are registered trademarks of I-PEX Inc. Please note that the contents in the catalog might be changed without prior notification. I-PEX Inc. assumes no responsibility for any inaccuracies or obligation to update Information on these documents. Please be sure to read and understand the latest "Precautions for Use" and "Instruction Manual" before you use our products. We shall not be responsible for any defects, damages or troubles in case you use our products without following the precautions for use. Please feel free to contact our sales representatives when you use our products for any applications that require very high reliability and safety, or that relate to human life (ex. nuclear power control, aerospace, transportation, medical equipment, safety equipment etc.).

Contact your sales representative or more detailed information.

www.i-pex.com

I-PEX

© I-PEX Inc. 2024
All rights reserved