PART NO.
8-23-0121

PLEASE CONTACT I-PEX FOR REQUESTS OTHER THAN THIS SPECIFICATIONS.
PLEASE NOTE IF SPECIFICATIONS CHANGE, PART NO. WILL ALSO CHANGE.

NOTES
1. PACKING : PLASTIC BAG
2. PERMISSIBLE LOAD ON THE CABLE AFTER MATING

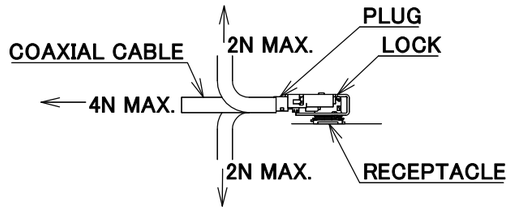

3. CABLE CRIMP STRENGTH : 15N MIN.
4. ORIENTATION OF CONNECTORS : 0° ±45°
5. TO OPERATE LOCK PART
   FOLLOW I-PEX INSTRUCTION MANUAL HIM-17020.
6. DO NOT ROTATE THE PLUG IN THE MATING CONDITION.

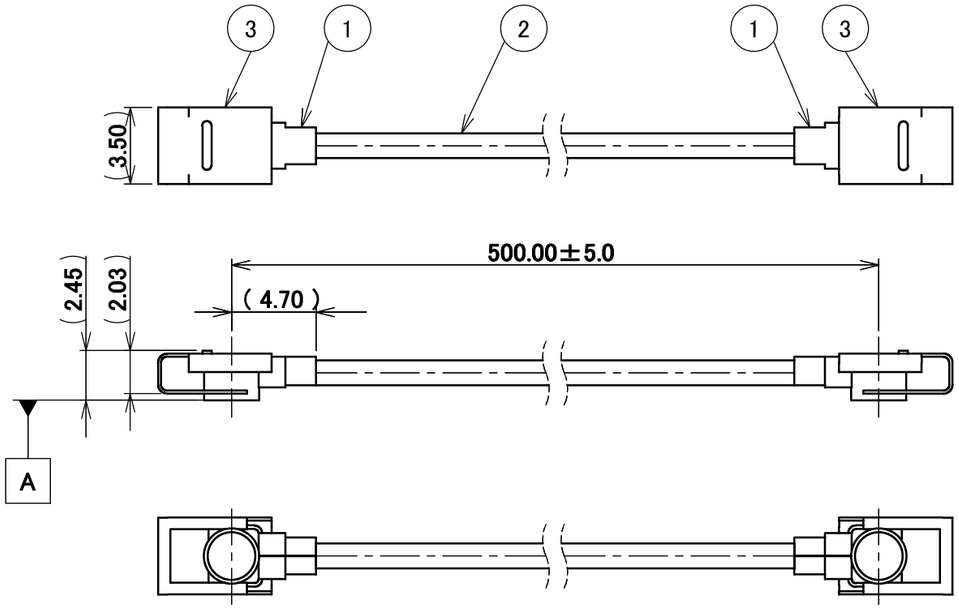

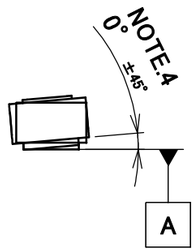

MULTIPLE CONNECTORS LAYOUT

COMPONENTS PLACEMENT PROHIBITED AREA
REQUIRED AREA FOR RECOMMENDED JIG TO OPERATE
MHF I LK HARNESS IN 4.50±0.15 mm PITCH (M.2 PITCH) SMOOTHLY.
JIG PART NUMBER: 91492-0001

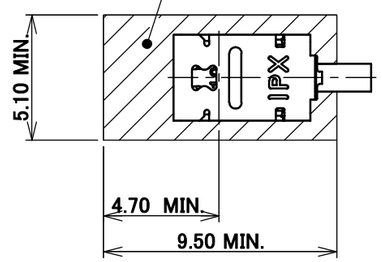

MATING AND LOCK CONDITION
WITH MHF I LK HARNESS NARROW PITCH

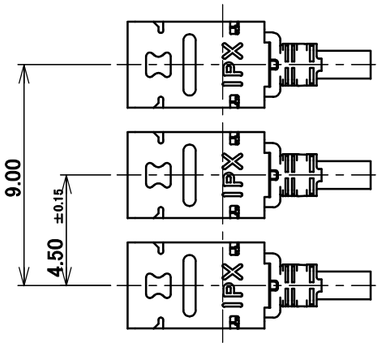

MHF I LK HARNESS UNLOCK CONDITION
NARROW PITCH DIMENSIONS

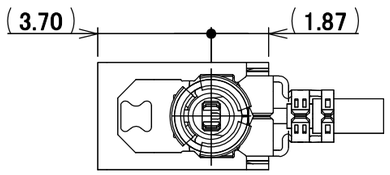

UNLOCKED CONDITION

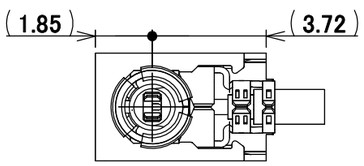

LOCKED CONDITION

DO NOT MATE WITH RECEPTACLE
UNDER THIS LOCKED CONDITION.

SINGLE CONNECTOR LAYOUT

COMPONENTS PLACEMENT PROHIBITED AREA
FOR PLUG 360° ROTATION AND UNMATING AND LOCK
JIG PART NUMBER: 91026-0001, 91492-0001

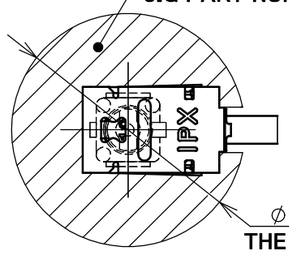

∅9.50 MIN.
THE CENTER OF THE CIRCLE MATCHES
THE CENTER OF RECEPTACLE.

MATING AND LOCK CONDITION
WITH MHF I LK HARNESS

NO.	DESCRIPTION	QTY	REMARK
3	LOCK PART	2	–
2	CABLE	1	AWG#30 Φ 1.37, BRAIDED SHIELD , BLACK
1	CONNECTOR-1, 2	2	MHF I Au

REV.	ECN	BY	DATE	APP.
0	Z231165	TOI	2023/09/27	

REVISION RECORD

ANGLE	±2°	6 OVER 30 MAX.	±0.3
6 MAX.	±0.2	30 OVER 120 MAX.	±0.5

GENERAL TOLERANCE.

PROJECTION

SERIES No. H-230031R

CUSTOMER COPY

DWG. M.Toida DATE 2023/09/27
CHK. K.Yufu
APP. Y.Hashimoto

TITLE MHF® I-I CABLE137-1 +LK

DWG. No. 8-23-0121

SCALE X:1 UNIT mm SIZE A3 SHEET 1/1 REV. 0

I-PEX

HF Halogen Free

RoHS Compliant

Confidential C

I-PEX Inc.

QKE-DFFDE06-02 REV.12